Vapor Stone RAIL SYSTEMS
A Wabtec company

10 655 Henri-Bourassa Blvd., West
Saint-Laurent (Québec) Canada
H4S 1A1

Tel: 514.335.4200
Fax: 514.335.4231
www.wabtec.com

Denver Regional Transportation District

DENVER EMU EAGLE P3 DOOR SYSTEM

Project # 7230

Door System

Neuron Serial Peripheral Interface (SPI) - Interface Control Document (ICD)

Contract Number	--	CDRL Number	--
		Customer Ref. Number	--

NOTICE
Plans, specifications and engineering data submitted herewith or which may be submitted, remain the property of **Vapor Stone Rail Systems** and shall not be reproduced or altered or used in whole or in part except by express consent of **VSRS**.

AVIS
Les plans, spécifications et données techniques soumis ci-joints, ou qui peuvent être soumis, restent la propriété de **Vapor Stone Rail Systems** et ne doivent pas être reproduits, altérés ou utilisés, totalement ou partiellement, sans le consentement express de **VSRS**.

	Ngami / Title	Signature / Date
Updated :	José Trejo Software Designer	Jose Emanuel Trejo de la Torre · 2011-10-27
Verified :	James Kim Software Designer	James Kim 2011-10-27
Approved :	Aldo Di Rocco Project Manager	2011-10-28

Document No.	201111629	Revision	1
		Date (yyyy-mm-dd)	2011-10-27

Revision List

Rev.	ECD#	Date	By	Description of changes
1	---	2011-10-27	José Trejo	Official release.
0.1	---	2011-10-25	José Trejo	Second revision done with internal inspection I-1873.
0	---	2011-10-05	José Trejo	Original issue.

Preface

This document complies with the requirements of the IEEE STD 1558-2004 standards for the ICD document.

Table of Contents

REVISION LIST **2**

PREFACE **3**

TABLE OF CONTENTS **4**

LIST OF FIGURES **5**

LIST OF TABLES **6**

1 INTRODUCTION **7**

1.1 Purpose 7
1.2 Scope 7
1.3 Definitions 7
1.4 Acronyms 7
1.5 References 8

2 INTERFACE **9**

2.1 Neuron SPI Interface Description 9
2.1.1 Interface Context 9
2.1.2 Interface Requirement 9
2.1.3 Interface Design 9
2.1.3.1 Level-1 Protocol 9
2.1.3.2 Protocol Format 9
2.1.3.3 Data Exchange Format 10
2.1.3.4 Definition of SPI Frames 11
2.1.3.5 Level-2 Protocol 14
2.1.3.6 Extra Data ID Descriptions –Neuron Gateway Application to DCU Application 14
2.1.3.7 Extra Data ID Descriptions – DCU Application to Neuron Gateway Application 16

List of Figures

Figure 2-1: Neuron Gateway Application Typical Interface Overview 9
Figure 2-2: SpiSck, SpiMtsr, SpiMrst, and SpiSync Chronogram 10
Figure 2-3: Data Exchange Chronogram 11
Figure 2-4: Level-2 Protocol Data Frame – NGA to DCU 15
Figure 2-5: Level-2 Protocol Data Frame – DCU to NGA 16

List of Tables

Table 2-1: SPI Hardware Interface 10
Table 2-2: SPI Timing Characteristics 10
Table 2-3: Message Frame 11
Table 2-4: SPI Frame Summary – Neuron Gateway Application to DCU Application 12
Table 2-5: SPI Frame Summary – DCU Application to Neuron Gateway Application 12
Table 2-6: SPI Frame NGA to DCU Data Fields Description 13
Table 2-7: SPI Frame DCU to NGA Data Fields Description 14
Table 2-8: Extra Data ID Description – NGA to DCU 15
Table 2-9: Description of Extra Data Fields – NGA to DCU 16
Table 2-10: Extra Data ID Description – DCU to NGA 17
Table 2-11: Description of Extra Data Fields – DCU to NGA 18

1 INTRODUCTION

This document is the Neuron Serial Peripheral Interface (SPI) - Interface Control Document (ICD) module developed by Vapor Stone Rail Systems.

1.1 Purpose

The purpose of this Neuron Serial Peripheral Interface (SPI) - Interface Control Document (ICD) is to describe the format and the meaning of the signals broadcasted.

The intended audience is the Vapor Stone Rail Systems software development team and maintenance team members of the transit authority and the car builder.

1.2 Scope

The Neuron Serial Peripheral Interface (SPI) - Interface Control Document (ICD) is a software module used for interfacing with the Neuron processor.

1.3 Definitions

Door Control Unit: A processor based electronic unit running software that controls the door, provides monitoring functions, and interacts with the user via a PTU Application and a network.

1.4 Acronyms

CDRL	Contract Data Requirements List
CMD	Command
CPLD	Complex Programmable Logic Device
CS	Crew Switch
DCM	Door Control Module
DCML	Door Close Mechanical lock
DCU	Door Control Unit
EDF	Event Description File
ICD	Interface Control Document
ID	Identification
IEEE	Institute of Electrical and Electronics Engineers
MDS	Monitoring and Diagnostic System
MOSI	Master Output, Slave Input
ms	Millisecond
NGA	Neuron Gateway Application
NLC	No LAN Communication
PDETLPWR	Passenger Door Enable TL PWR
PDETLRTN	Passenger Door Enable TL RTN
RTN	Return
PDOPB	Passenger Door Open Pushbutton
PTA	Portable Test Application
PTU	Portable Test Unit
PWR	Power
RTD	Regional Transportation District
SCK	Synchronous Clock
SPI	Serial Peripheral Interface
SRS	Software Requirements Specification
Std	Standard
TL	Train Line
VSRS	Vapor Stone Rail Systems

1.5 References

This section lists the number, title, revision, date, and source of all documents referenced in this manual.

Standards

IEEE Std 1063-2001	IEEE Standard for Software User Documentation, 2001-12-20, IEEE, www.ieee.org
IEEE Std 1558-2004	IEEE Standard for Software Documentation for Rail Equipment and Systems, 2005-03-23, IEEE, www.ieee.org
IEEE J-Std 016-1995	IEEE Trial-Use Standard for Information Technology Software Life Cycle Processes Software Development - Acquirer-Supplier Agreement, 1995-09-30, IEEE, www.ieee.org

Vapor Stone Rail Systems Documents

201111185	System Functional Description, RTD Denver EMU Door System, Rev. 4
201111186	Software Configuration Management Plan, Door System, Rev. 1
201111207	Software Project Management Plan, Door System, Rev. 0
201111208	Software Quality Assurance Plan, Door System, Rev. 1
201111254	Software Verification and Validation Plan, Door System, Rev. 0
201111256	Neuron Gateway Application Software Requirement Specification, Rev 1.
201111576	Software Applications Configuration Specifications (SACS), Rev. 1
S17-01	Software Requirements Specification Template, Rev. 0, 2002-01-15

2 INTERFACE

2.1 Neuron SPI Interface Description

2.1.1 Interface Context

Figure 2-1 depicts the software system logical Neuron SPI interfaces for the most of the projects in VSRS.

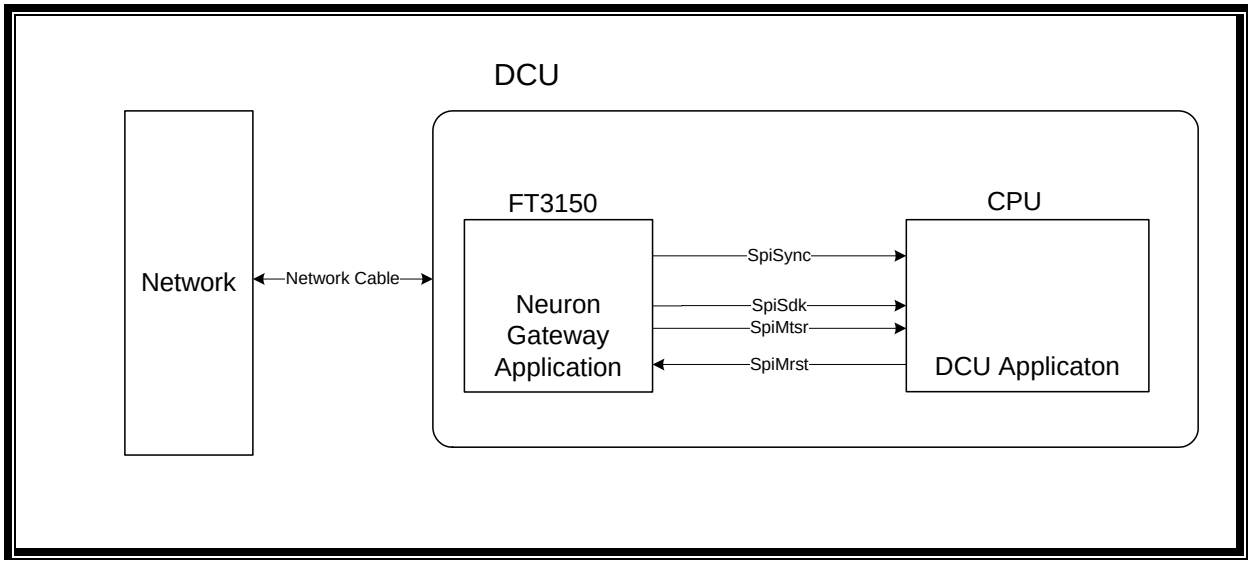

Figure 2-1: Neuron Gateway Application Typical Interface Overview

2.1.2 Interface Requirement

The Neuron Gateway Application works as the SPI Master. It performs the data exchange with the DCU Application every 50ms. No acknowledgement is required. The Checksum is used to validate data transmission by both the DCU Application and the Neuron Gateway Application.

There are two kinds of message exchanges between Neuron Gateway Application and DCU Application:

- Neuron Gateway Application to DCU Application
- DCU Application to Neuron Gateway Application

2.1.3 Interface Design

2.1.3.1 Level-1 Protocol

Both Table 2-4: SPI Frame Summary – Neuron Gateway Application to DCU Application and Table 2-5: SPI Frame Summary – DCU Application to Neuron Gateway Application provide a summary of the bit assignments within the message frames.

2.1.3.2 Protocol Format

The Neuron Gateway Application uses an SPI interface to retrieve the DCU status, and pass the Network & Neuron Gateway Application Status to the DCU Application

The SPI media access signals are described in Table 2-1and in Table 2-2 the shape of these signals is shown in Figure 2-2. The DCU Application shifts data on the SpiMtsr a short time (firmware dependent) before the rising edge of SpiSck, while the data is sampled onto the SpiMrst a short time (firmware dependent) after the rising

edge of SpiSck. The most significant bit is transmitted first. Communication occurs in full duplex mode where 8 bits are exchanged (8 in, 8 out) per 8 SCK cycles. The rising edge of SpiSync signal marks the beginning of each multi-byte frame.

Table 2-1: SPI Hardware Interface

Signal	I/O	Notes
SpiMtsr	Output Serial Synchronous	Master transmit, Slave receive. 8 data bits, most significant bit first, data transmitted on rising edge of SCK.
SpiMrst	Input Serial Synchronous	Master receive, Slave transmit. Same as MOSI but data sampled on falling edge of SCK.
SpiSck	Output Complex	Serial synchronous clock. See Figure 2-2.
SpiSync	Output Complex	Frame synchronization. See Figure 2-2.

Table 2-2: SPI Timing Characteristics

Parameters	Symbol	Min	Typ.	Max	Unit
SpiSck period	t_{sck}	---	50	---	µsec
	baud	---	20	---	Kbaud
Frame sync to first clock	t_{sy}	150	---	--	µsec

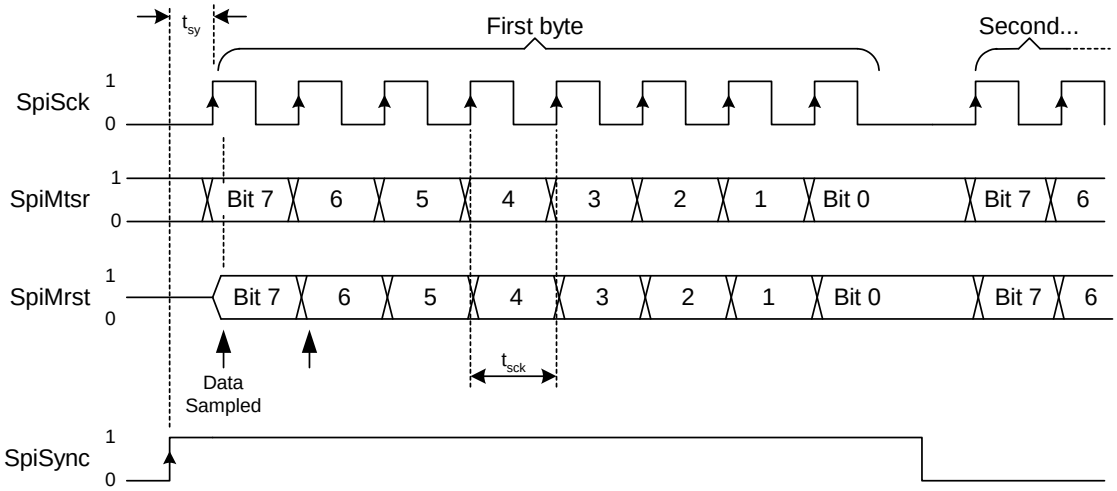

Figure 2-2: SpiSck, SpiMtsr, SpiMrst, and SpiSync Chronogram

2.1.3.3 Data Exchange Format

For each time data exchange, 26 bytes are exchanged in full-duplex by the Master and the Slave, see Table 2-3. While the Master transfers its 26 bytes, the Slave successively transmits a 26-byte frame.

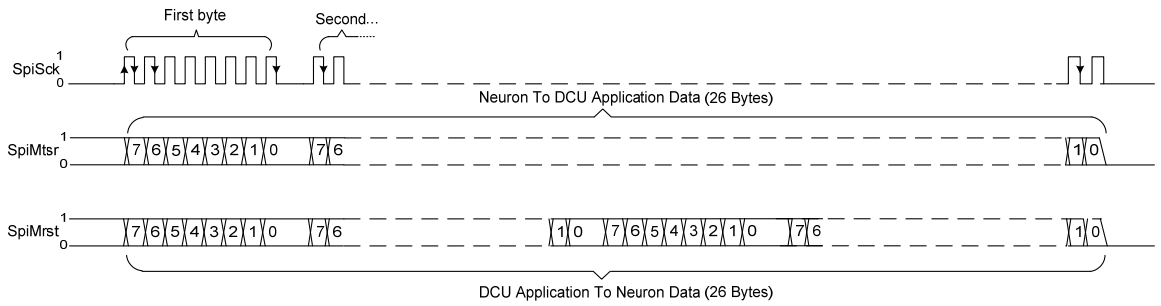

Figure 2-3: Data Exchange Chronogram

The data frames transferred consist of three different sections: one synchronization byte, one data part, and a checksum byte, see Table 2-3.

Table 2-3: Message Frame

Header	Data Part			Trailer
Sync	Data 0	Data 1	…	Checksum

The synchronization byte value is either 0xAA or 0x55.
The Checksum is the 8-bit sum of Data 0 through all Data, plus one.

2.1.3.4 Definition of SPI Frames

Table 2-4 and Table 2-5 show how the frames are built on the SPI communication. A description of the used data is shown in Table 2-6 and Table 2-7.

Table 2-4: SPI Frame Summary – Neuron Gateway Application to DCU Application

	Bit 7							Bit 0
SYNC	1	0	1	0	1	0	1	0

MDS_Time

	Bit 7	Bit 0
Data 0	MDS_Time.year (High byte)	
Data 1	MDS_Time.year (Low byte)	
Data 2	MDS_Time.month	
Data 3	MDS_Time.day	
Data 4	MDS_Time.hour	
Data 5	MDS_Time.minute	
Data 6	MDS_Time.second	

Data 7	CarID (High byte)
Data 8	CarID (Low byte)
Data 9	DCU_Location
Data 10	Spare
Data 11	Spare
Data 12	Spare
Data 13	Spare

	Bit 7							Bit 0
Data 14			NGA_CRC_Fault	-	-	-	-	-
Data 15	LonWorksErr	NLC		IDENTFault	SelfInstallFault	ReceivedTime		SPIErr
Data 16								
Data 17								
Data 18								
Data 19								
Data 20								
Data 21								
Data 22	ExtraDataID_FromNGA							
Data 23	ExtraData_FromNGA							
Checksum	CHK7	CHK6	CHK5	CHK4	CHK3	CHK2	CHK1	CHK0

Table 2-5: SPI Frame Summary – DCU Application to Neuron Gateway Application

	Bit 7							Bit 0
SYNC	0	1	0	1	0	1	0	1
Data0	ZeroSpeedPWR	ZeroSpeedRTN	OpenTLCMD	CloseTLCMD	CSOpenCMD	CSCloseCMD	PDETLPWR	PDETLRTN
Data1	PDOPB	DCMLnotNormal	Emergency	NoMotionPWR	DoorCloseStatus	DoorLockStatus	DSRLow	DSRHigh
Data2	MotorCurrent							
Data3	MotorVoltage							
Data4	Obstruction	DCUMajorFail	DCUMinorFail	ReducedSpeed	DisableOpen	DisableClose	Event1	Event2
Data5	3	4	5	6	7	8	9	10
Data6	11	12	13	14	15	16	17	18
Data7	19	20	21	22	23	24	25	26
Data8	27	28	29	30	31	32	33	34
Data9	35	36	37	38	39	40	41	42
Data10	43	44	45	46	47	48	49	50
Data11	51	52	53	54	55	56	57	58
Data12	59	60	61	62	63	64	65	66
Data13	67	68	69	70	71	72	73	74
Data14	75	76	77	78	79	80	81	82
Data15	82	83	84	85	86	87	88	89
Data16	90	91	92	93	94	95	96	97
Data17	Event98	Event99						
Data18								
Data19								
Data20								
Data21								
Data22	ExtraDataID_ToNGA							
Data23	ExtraData_ToNGA							
Check sum	CHK7	CHK6	CHK5	CHK4	CHK3	CHK2	CHK1	CHK0

Table 2-6: SPI Frame NGA to DCU Data Fields Description

Data	I/O	Notes
SYNC	Output Integer	The SYNC byte forms the header and marks the beginning of a frame. This is value 0xAA.
MDS_Time.year	Output Long	Valid range 0-3000 (0-0x0BB8), resolution 1. Actual use year for use in fault records. Used range is 1990 – 2100 (0x07C6-0x0834).
MDS_Time.month	Output Integer	Current month for use in fault records. Valid range is 1 – 12 (0x01-0x0C) for January – December.
MDS_Time.day	Output Integer	Current day of the month for use in fault records. Valid range is 1 – 31 (0x00-0x1F).
MDS_Time.hour	Output Integer	Current hour of day for use in fault records. Valid range is 0 – 23 (0x00-0x17). (Uses 24-hour format)
MDS_Time.minute	Output Integer	Current minutes for use in fault records. Valid range is 0 – 59 (0x00-0x3B).
MDS_Time.second	Output Integer	Current seconds for use in fault records. Valid range is 0 – 59 (0x00-0x3B).
CarID	Output Long	Car number. Valid range is 0 – 65,535. (0x0000-0xFFFF)
DCU_Location	Output Integer	DCU locations possible values are 1 to 4
Spare	Output Integer	Not Used
LonWorksErr	Output Boolean	Set when the Neuron detects a LONWORKS interface error.
NLC	Output Boolean	No LAN Communication since 90 seconds. 1 = No comm., 0 = Ok.
MKS_Console	Output Boolean	MKS Status on the Console – received thru network; 1 = Comm or On position, 0 = Run position
NGA_CRC_Fault	Output Boolean	Set when if NA detects CRC fault for its Code space
IDENTFault	Output Boolean	This bit is set when the Neuron detects an IDENT circuit failure.
SelfInstallFault	Output Boolean	This bit is set when the Neuron detects a Node Self-Installation (Domain Table) failure.
ReceivedTime	Output Boolean	This bit is set when the Neuron received the Present Time from car network. It is reset automatically after it has been sent to the DCU twice.
Not Used	Output Boolean	Not Used
SPIErr	Output Boolean	This bit is set when the previous received SPI data from DCU Application has error detected or to “0” when no error is found.
Not Used	Output Integer	Not Used
Not Used	Output Integer	Not Used
Not Used	Output Integer	Not Used
Not Used	Output Integer	Not Used
Not Used	Output Integer	Not Used
Not Used	Output Integer	Not Used
Not Used	Output Integer	Not Used
Not Used	Output Integer	Not Used
ExtraDataID_FromNGA	Input Integer	Level-2 protocol data number. See section 2.1.3.5.
ExtraData_FromNGA	Input Integer	Level-2 protocol data value. See section 2.1.3.5.
Checksum	Output Integer	This 8 bits value is the summation of all the data bytes and the header byte, plus one.

Table 2-7: SPI Frame DCU to NGA Data Fields Description

Data	I/O	Notes
SYNC	Input Integer	This is value 0x55. The SYNC byte forms the header and marks the beginning of a frame.
ZeroSpeedPWR	Input Boolean	Set when Zero Speed Power CL signal is active.
ZeroSpeedRTN	Input Boolean	Set when Zero Speed Return CL signal is active.
OpenTLCMD	Input Boolean	Set when Open Train Line command is issued.
CloseTLCMD	Input Boolean	Set when Close Train Line command is issued.
CSOpenCMD	Input Boolean	Set when Crew Switch Open Command is issued.
CSCloseCMD	Input Boolean	Set when Crew Switch Close Command is issued.
PDETLPWR	Input Boolean	Set when Passenger Door Enable Train Line PWR signal is active.
PDETLRTN	Input Boolean	Set when Passenger Door Enable Train Line RTN signal is active.
PDOPB	Input Boolean	Set when Passenger Door Open Pushbutton signal is active.
DCMLnotNormal	Input Boolean	Set when Door Cut-Out Mechanical Lock is not in Normal position.
Emergency	Input Boolean	Set when Emergency signal is activated.
NoMotionPWR	Input Boolean	Set when the car is below 'No Motion' threshold and reset when above 'No Motion' threshold.
DoorCloseStatus	Input Boolean	Set when both Panel Sensing Switches indicate closed door.
DoorLockStatus	Input Boolean	Set when both Solenoid Lock Switches indicate locked door.
DSRLow	Input Boolean	Set when Door Summary Relay Low Side signal is active.
DSRHigh	Input Boolean	Set when Door Summary Relay High Side signal is active.
MotorCurrent	Output Integer	Set when This 8-bit value represents the value of motor current being applied; Valid range is 0 to 255.
MotorVoltage	Output Integer	This bit is set when Motor Voltage is within range, and to "0" otherwise.
Obstruction	Input Boolean	Set when and obstruction is detected.
DCUMajorFail	Input Boolean	Set when DCU Major Failure is enabled.
DCUMinorFail	Input Boolean	Set when DCU Minor Failure is enabled.
ReducedSpeed	Input Boolean	Set when Reduced Speed is enabled.
DisableOpen	Input Boolean	Set when Disable Open is enabled.
DisableClose	Input Boolean	Set when Disable Close is enabled.
Event1	Input Boolean	Set when Event1… (is enabled).
Eventxx	Input Integer to each event	Set when individually when any event from Event 2 to event 98 (is enabled).
Event99	Input Integer	Event 99…(is enabled).
ExtraDataID_ToNGA	Input Integer	Level-2 protocol data number is enabled. See section 2.1.3.5.
ExtraData_ToNGA	Input Integer	Level-2 protocol data value is enabled. See section 2.1.3.5.
CHK7:0	Input Integer	This 8 bits value is the summation of all the data bytes and the header byte, plus one. Upon reception, if the checksum does not check ok, the data frame shall be ignored.

2.1.3.5 Level-2 Protocol

Embedded in the ExtraDataID/ExtraData bytes of the Level-1 protocol is the Level-2 protocol. The Level-2 protocol allows for transferring data that do not need rapid update.

2.1.3.6 Extra Data ID Descriptions –Neuron Gateway Application to DCU Application

The Level-2 data frame is composed of 24 bytes; the ExtraDataID_FromNGA are transmitted in succession, from ID1 to ID 24.

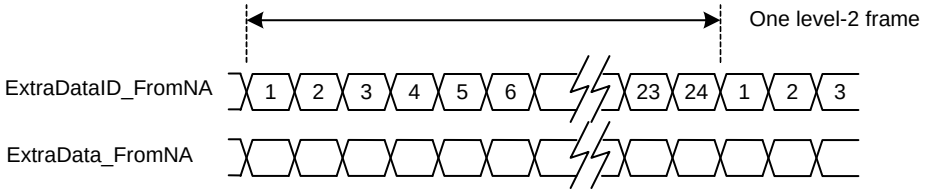

Figure 2-4: Level-2 Protocol Data Frame – NGA to DCU

The ExtraDataID_FromNGA byte is used to identify the data in the current ExtraData_FromNGA field. The Table 2-8: lists all possible IDs in the SPI communication.

Table 2-9 is an Extra Data Fields – Neuron Gateway Application to DCU Application

Table 2-8: Extra Data ID Description – NGA to DCU

ExtraDataID	ExtraData
0	(Invalid)
1	NGA_Crc32 (Byte3)
2	NGA_Crc32 (Byte2)
3	NGA_Crc32 (Byte1)
4	NGA_Crc32 (Byte0)
5	NGA_VerMaj
6	NGA_VerMin
7	NGA_CompileTime_year (High byte)
8	NGA_CompileTime_year (Low byte)
9	NGA_CompileTime_month
10	NGA_CompileTime_day
11	NGA_StringDescription0
12	NGA_StringDescription1
13	NGA_StringDescription2
14	NGA_StringDescription3
15	NGA_StringDescription4
16	NGA_StringDescription5
17	NGA_StringDescription6
18	NGA_StringDescription7
19	NGA_StringDescription8
20	NGA_StringDescription9
21	NGA_StringDescription10
22	NGA_StringDescription11
23	NGA_StringDescription12
24	NGA_StringDescription13
25 – 255	(Invalid)

Table 2-9: Description of Extra Data Fields – NGA to DCU

Data	I/O	Notes
NGA_Crc32	Output 4 Bytes	Neuron Gateway Application CRC. Valid range 0 – 4,294,967,295
NGA_VerMaj	Output Byte	Neuron Gateway Application Version Information - Major. Valid range: 0 – 255.
NGA_VerMin	Output Byte	Neuron Gateway Application Version Information - Minor. Valid range: 0 – 99.
NGA_CompileTime_year	Output Long	Neuron Gateway Application Compilation Time - Year. Valid range: 0 – 65,535.
NGA_CompileTime_month	Output Byte	Neuron Gateway Application Compilation Time - Month. Valid range: 0 – 255.
NGA_CompileTime_day	Output Byte	Neuron Gateway Application Compilation Time - Day. Valid range: 0 – 255.
NGA_StringDescription0: NGA_StringDescription13	Output String	Neuron Gateway Application Description String. Format: 14-byte string. Valid range: each character is 0x00, and 0x20 – 0x7E. If string is less than 14 characters long, empty spaces shall be 0x00 up to (and including) NGA_StringDescription13. This string shall be set to “NEURON APP”
NGA_CodeSize	Output Long	Neuron Gateway Application Code size. Valid range: 0 – 65,535.

2.1.3.7 Extra Data ID Descriptions – DCU Application to Neuron Gateway Application

The Level-2 data frame is composed of 86 bytes; the ExtraDataID_ToNGA are transmitted in succession, from ID 1 to ID 86.

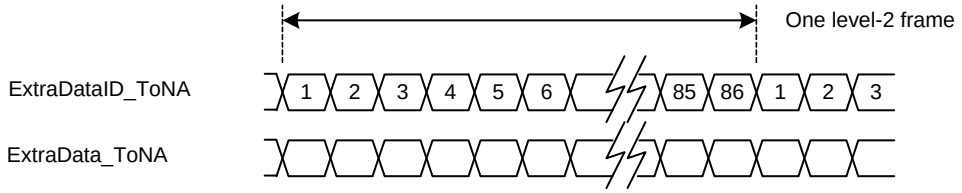

Figure 2-5: Level-2 Protocol Data Frame – DCU to NGA

The ExtraDataID_ToNGA byte is used to identify the data in the current ExtraData_ToNGA field. The Table 2-10 lists all possible IDs in the SPI communication.

Table 2-11 Is Description of Extra Data Fields – DCU Application to Neuron Gateway Application

Table 2-10: Extra Data ID Description – DCU to NGA

ExtraDataID	ExtraData
0	(Invalid)
1	App_Crc32_3
2	App_Crc32_2
3	App_Crc32_1
4	App_Crc32_0
5	Boot_Crc32_3
6	Boot_Crc32_2
7	Boot_Crc32_1
8	Boot_Crc32_0
9	CPLD_Crc32_3
10	CPLD_Crc32_2
11	CPLD_Crc32_1
12	CPLD_Crc32_0
13	App_Version0
14	App_Version1
15	App_Version2
16	App_Version3
17	App_Version4
18	App_Version5
19	Boot_Version0
20	Boot_Version1
21	Boot_Version2
22	Boot_Version3
23	Boot_Version4
24	Boot_Version5
25	CPLD_Version0
26	CPLD_Version1
27	CPLD_Version2
28	CPLD_Version3
29	CPLD_Version4
30	CPLD_Version5
31	App_StringDescription0
32	App_StringDescription1
33	App_StringDescription2
34	App_StringDescription3
35	App_StringDescription4
36	App_StringDescription5
37	App_StringDescription6
38	App_StringDescription7
39	App_StringDescription8
40	App_StringDescription9
41	App_StringDescription10
42	App_StringDescription11
43	App_StringDescription12

ExtraDataID	ExtraData
44	App_StringDescription13
45	Boot_StringDescription0
46	Boot_StringDescription1
47	Boot_StringDescription2
48	Boot_StringDescription3
49	Boot_StringDescription4
50	Boot_StringDescription5
51	Boot_StringDescription6
52	Boot_StringDescription7
53	Boot_StringDescription8
54	Boot_StringDescription9
55	Boot_StringDescription10
56	Boot_StringDescription11
57	Boot_StringDescription12
58	Boot_StringDescription13
59	CPLD_StringDescription0
60	CPLD_StringDescription1
61	CPLD_StringDescription2
62	CPLD_StringDescription3
63	CPLD_StringDescription4
64	CPLD_StringDescription5
65	CPLD_StringDescription6
66	CPLD_StringDescription7
67	CPLD_StringDescription8
68	CPLD_StringDescription9
69	CPLD_StringDescription10
70	CPLD_StringDescription11
71	CPLD_StringDescription12
72	CPLD_StringDescription13
73	Fault1-8_Attributes
74	Fault9-16_Attributes
75	Fault17-24_Attributes
76	Fault25-32_Attributes
77	Fault33-40_Attributes
78	Fault41-48_Attributes
79	Fault49-56_Attributes
80	Fault57-64_Attributes
81	Fault65-72_Attributes
82	Fault73-80_Attributes
83	Fault81-88_Attributes
84	Fault89-96_Attributes
85	EDF_Version_Maj
86	EDF_Version_Min
87 – 255	(Invalid)

Table 2-11: Description of Extra Data Fields – DCU to NGA[1]

Data	I/O	Notes
App_Crc32_3: App_Crc32_0	Input 4 Bytes	DCU Application CRC. Valid range 0 – 4,294,967,295
Boot_Crc32_3: Boot_Crc32_0	Input 4 Bytes	DCU Boot Loader CRC. Valid range 0 – 4,294,967,295.
CPLD_Crc32_3: CPLD_Crc32_0	Input 4 Bytes	DCU CPLD CRC. Valid range 0 – 4,294,967,295.
App_Version0: App_Version5	Input String	DCU Application Version. Format: 6-byte string. Valid range: each character is 0x00, and 0x20 – 0x7E.
Boot_Version0: Boot_Version5	Input String	DCU Boot Loader Version. Format: 6-byte string. Valid range: each character is 0x00, and 0x20 – 0x7E.
CPLD_Version0: CPLD_Version5	Input String	DCU CPLD Version. Format: 6-byte string. Valid range: each character is 0x00, and 0x20 – 0x7E.
App_StringDescription0: App_StringDescription13	Input String	DCU Application Description String. Format: 14-byte string. Valid range: each character is 0x00, and 0x20 – 0x7E. If string is less than 14 characters long, empty spaces shall be 0x00 up to (and including) App_StringDescription13
Boot_StringDescription0: Boot_StringDescription13	Input String	DCU Boot Loader Description String. Format: 14-byte string. Valid range: each character is 0x00, and 0x20 – 0x7E. If string is less than 14 characters long, empty spaces shall be 0x00 up to (and including) Boot_StringDescription13
CPLD_StringDescription0: CPLD_StringDescription13	Input String	DCU CPLD Description String. Format: 14-byte string. Valid range: each character is 0x00, and 0x20 – 0x7E. If string is less than 14 characters long, empty spaces shall be 0x00 up to (and including) CPLD_StringDescription13
Fault1-112_Attributes	Input Byte	Bit fields representing Attributes of corresponding Fault bits in Level 1 Frame. 0: Failure; 1: Exception. Part of Event Description File (EDF) in DCU Application
EDF_Version_Maj	Input Byte	Major Version number of EDF (Fault1-112_Attributes above)
EDF_Version_Min	Input Byte	Minor Version number of EDF (Fault1-112_Attributes above)

[1] Data values are named with the DataType: DataTypeCorrespondingByte.